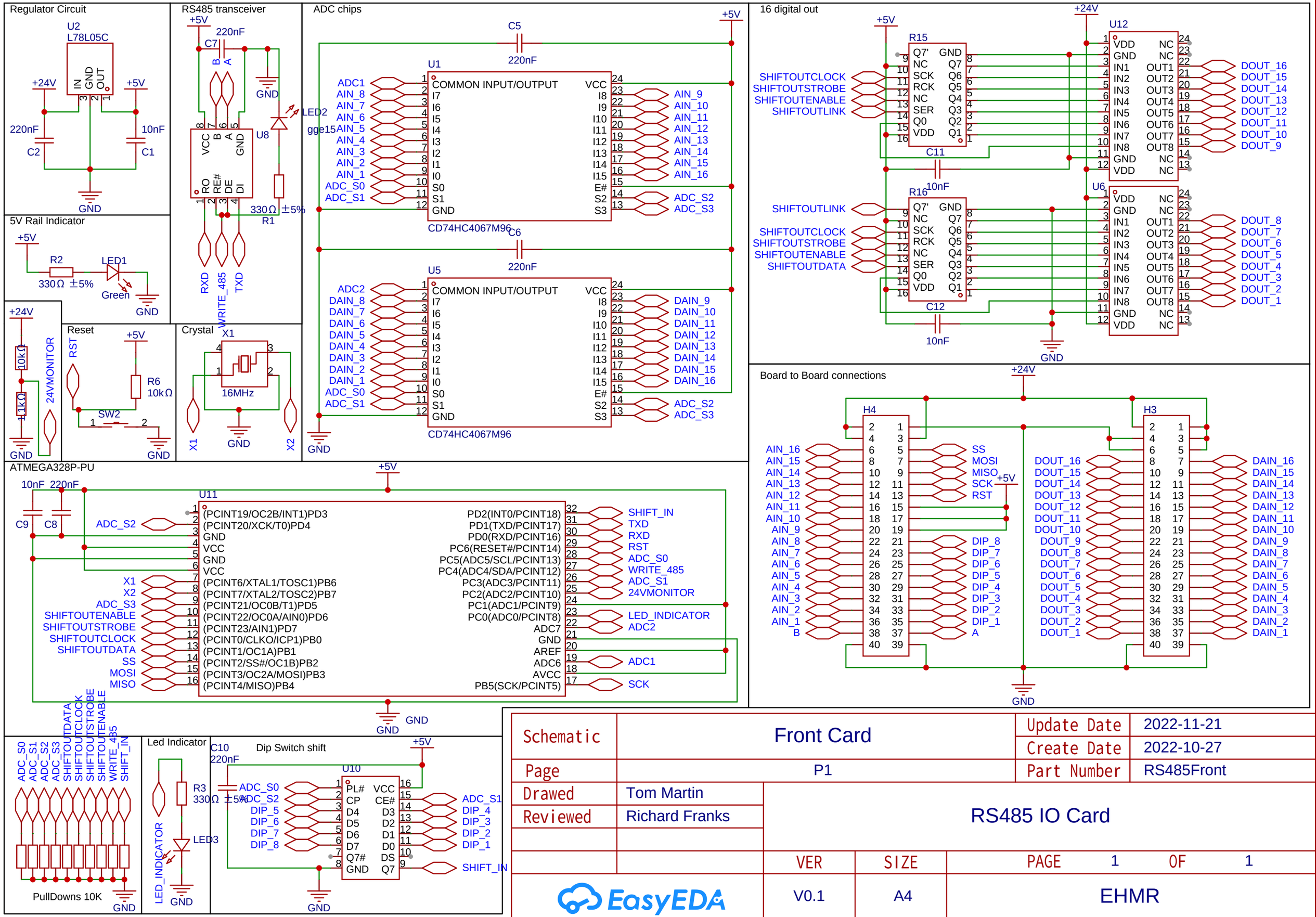

Schematic	Front Card	Update Date	2022-11-21
		Create Date	2022-10-27
Page	P1	Part Number	RS485Front
Drawed	Tom Martin	RS485 IO Card	
Reviewed	Richard Franks		
		VER	SIZE	PAGE 1 OF 1
EasyEDA		V0.1	A4	EHMR